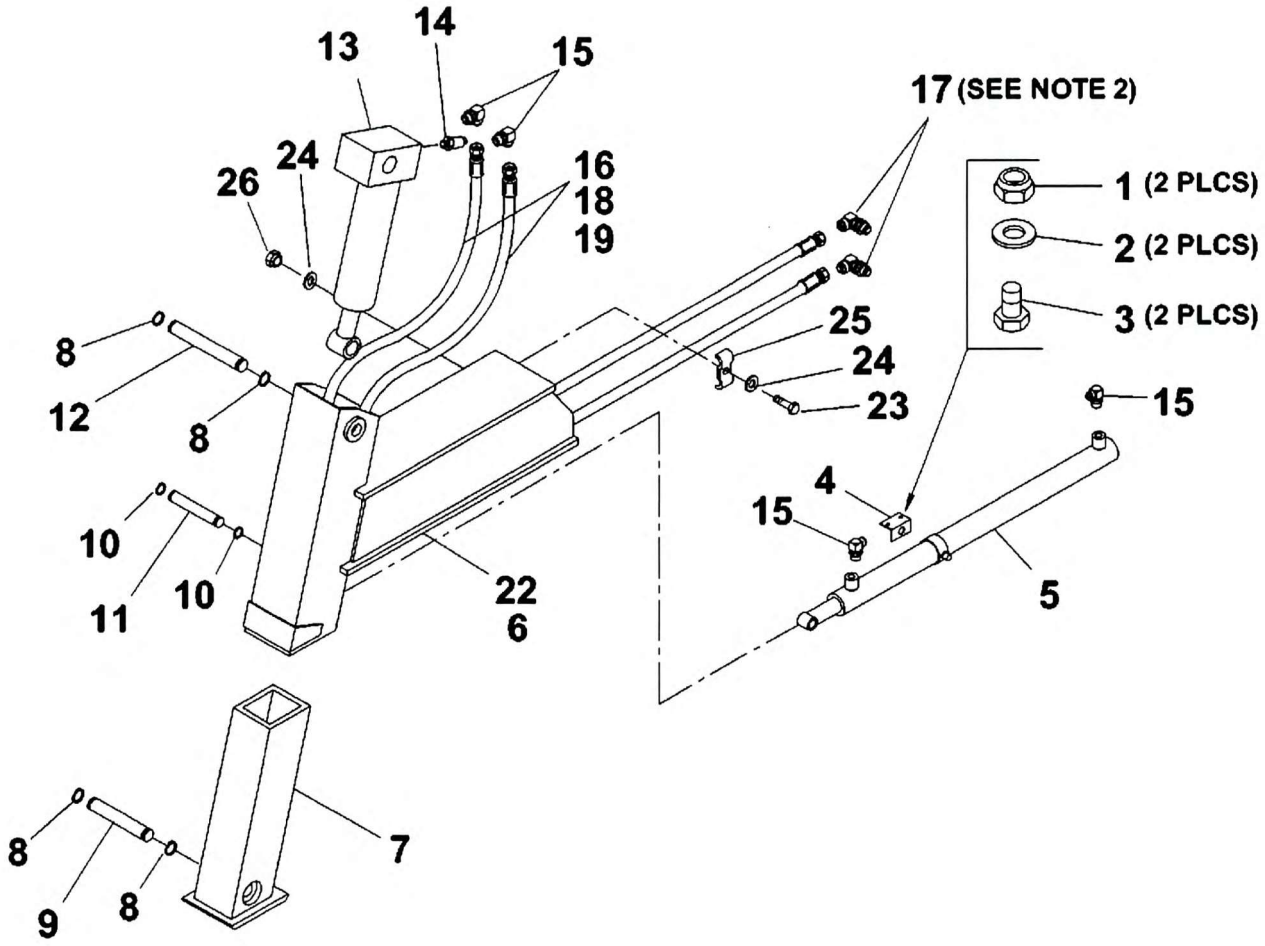

NOTES:
1. 4 ASSEMBLIES REQUIRED.
2. RIGHT HAND SIDE OF MACHINE, RETRACT IS ON THE TOP. LEFT HAND SIDE OF MACHINE, EXTEND IS ON TOP.

1500544

(SHEET 1 OF 1)